by MM Store
Specialist in Kinderkamers

# FEMI COMMODE 2203

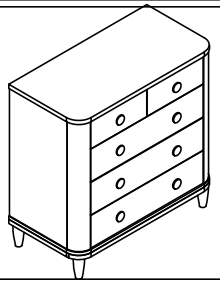

## ACCESSORIES LIST

| | | | | |
|---|---|---|---|---|
| ACCESSORIE NO : 317<br>10'LUK MİNİFİX MİL<br> <br>44 ADET | ACCESSORIE NO : 002<br>TİTUS MİNİFİX GÖVDE<br> <br>50 ADET | ACCESSORIE NO : 001<br>MİNİFİX MİL 6 MM<br> 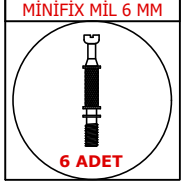 <br>6 ADET | ACCESSORIE NO : 004<br>ø8x30 KAVELA<br> <br>46 ADET | ACCESSORIE NO : 020<br>MİNİFİX TAPA<br>BEYAZ<br> <br>20 ADET |
| ACCESSORIE NO : 533<br>3,9*28 MM PLS.VİDA<br> 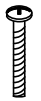 <br>8 ADET | ACCESSORIE NO : 406<br>PLS. RAF PİMİ EURO VİDALI<br> 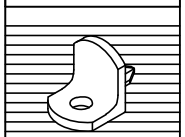 <br>8 ADET | ACCESSORIE NO : 119<br>6.3*9 MM EURO VİDA<br> <br>28 ADET | ACCESSORIE NO : 351<br>TANDEM RAY 400<br>(SAMET)<br> 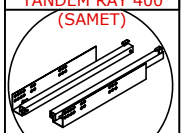 <br>5 TAKIM | ACCESSORIE NO : 011<br>ARKALIK SABİTLEME<br>3.5x25 S.VİDASI<br> 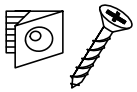 <br>8 ADET |
| ACCESSORIE NO : 519<br>Ø40 K002 KULP<br>PEMBE<br> <br>8 ADET | ACCESSORIE NO : 524<br>ARDINÇ AYAK<br> 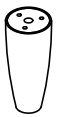 <br>4 ADET | ACCESSORIE NO : 299<br>M6*25 VİDA<br> 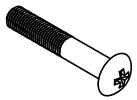 <br>4 ADET | ACCESSORIE NO : 095<br>4*30 MM S. VİDASI<br> 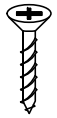 <br>12 ADET | |

YEDEK AKSESUAR SİPARİŞLERİNİ RESME BAKARAK VERİNİZ. (Örn:ACCESSORIE.NO:008 - RAFİX MİL - 1 Ad.)
PLEASE ORDER THE ACCESSORIES ACCORDING TO THE REFERENCE NUMBER ON THE DRAWING(EXAMPLE ACCESSORIE NO-008 RAFIX MIL 1.PCS.)

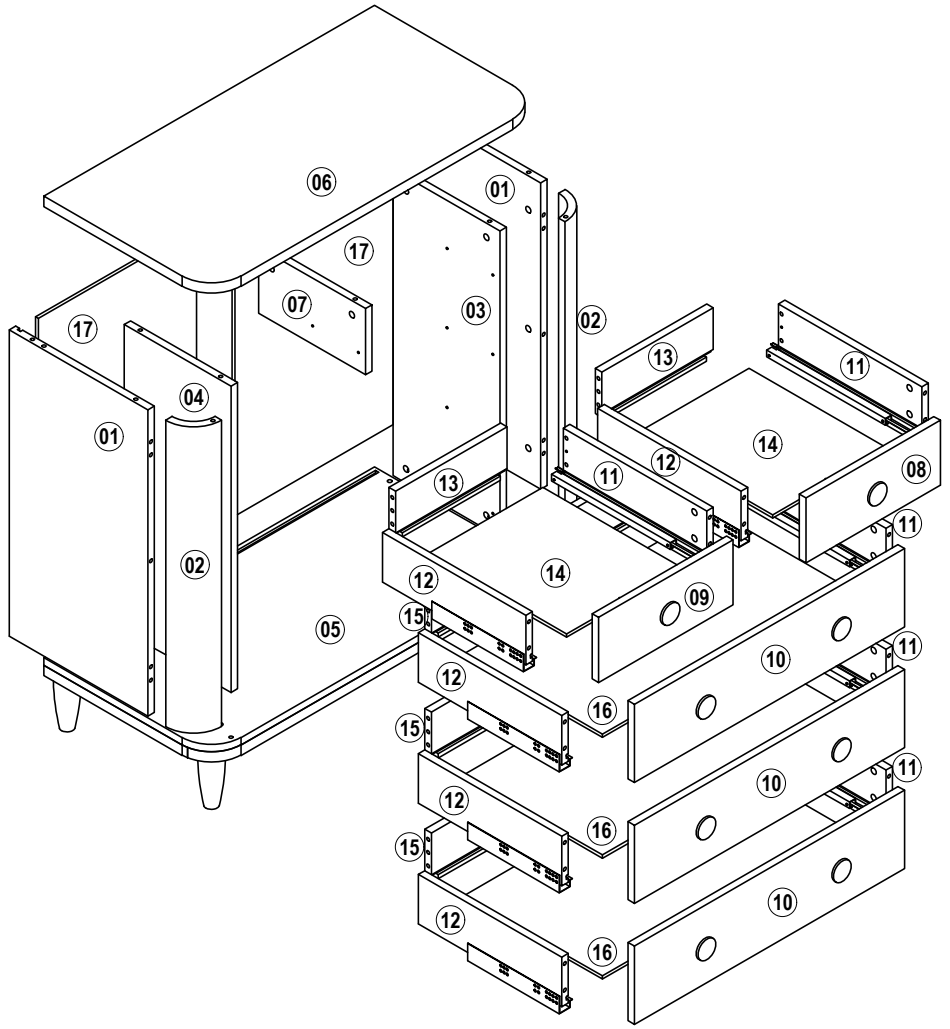


FR-002

| NO | ADET/PCS | | NO | ADET/PCS | | NO | ADET/PCS | |
|---|---|---|---|---|---|---|---|---|
| 01 | 2 | | 11 | 5 | | | | |
| 02 | 2 | | 12 | 5 | | | | |
| 03 | 1 | | 13 | 2 | | | | |
| 04 | 1 | | 14 | 2 | | | | |
| 05 | 1 | | 15 | 3 | | | | |
| 06 | 1 | | 16 | 3 | | | | |
| 07 | 1 | | 17 | 2 | | | | |
| 08 | 1 | | | | | | | |
| 09 | 1 | | | | | | | |
| 10 | 3 | | | | | | | |

YEDEK PARÇA SİPARİŞLERİNİ RESME BAKARAK PARÇA NUMARASINA GÖRE VERİNİZ
PLEASE ORDER THE SPARE PARTS ACCORDING TO THE REFERENCE NUMBER ON THE DRAWING

# INSTALLATION STEPS

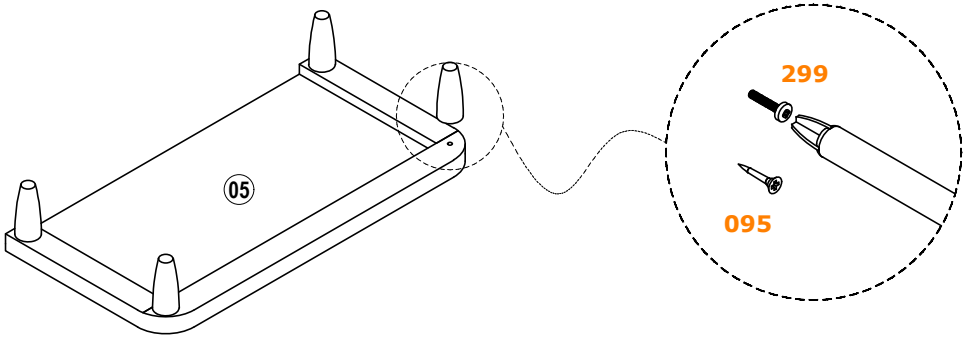


1

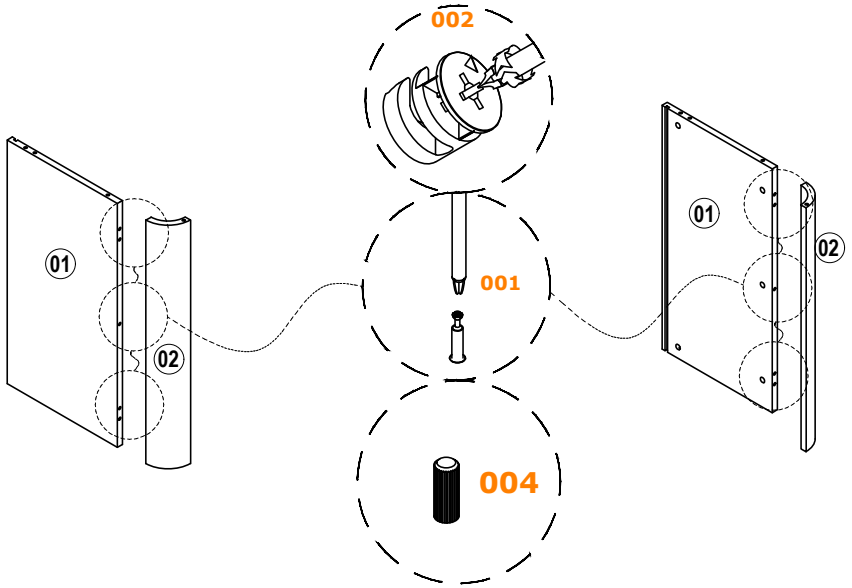


2

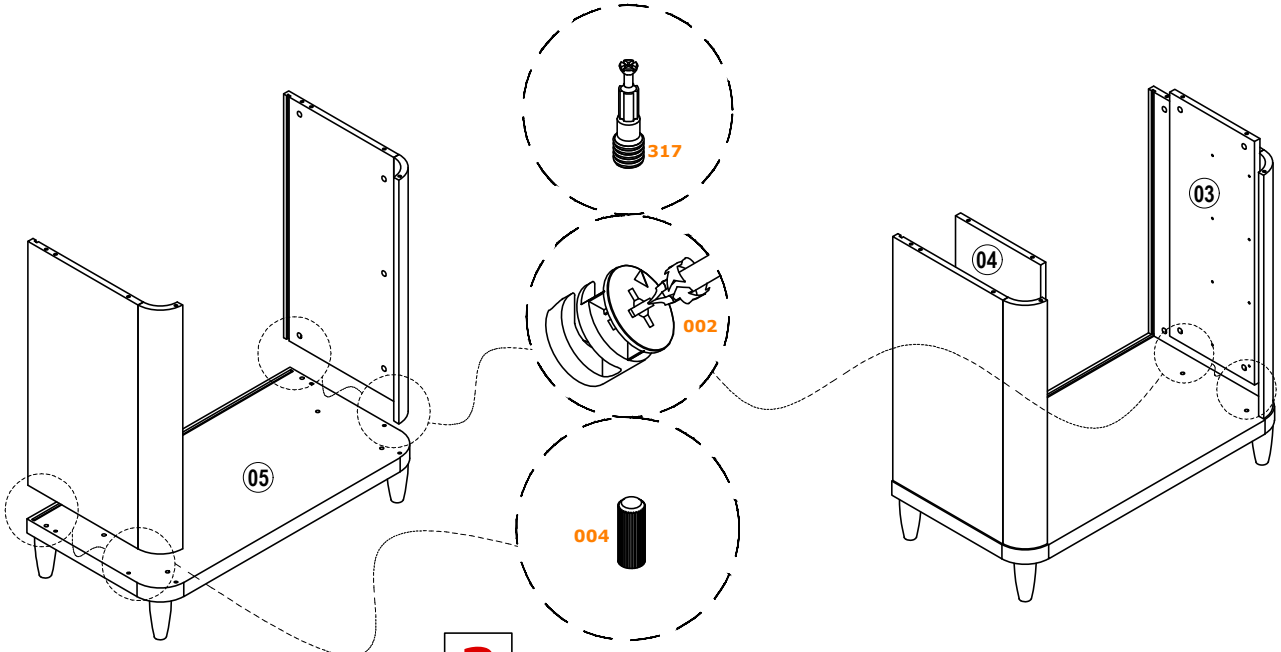


3




4

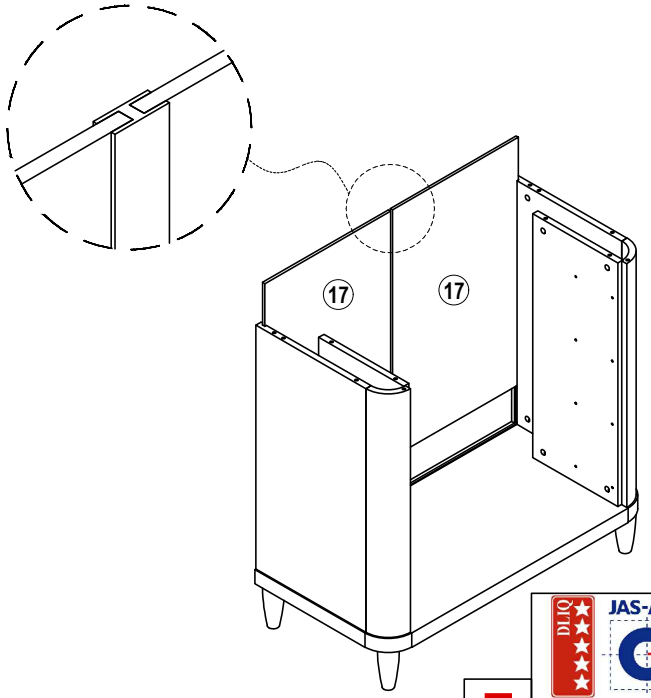


5

Quality Endorsed Company

# INSTALLATION STEPS

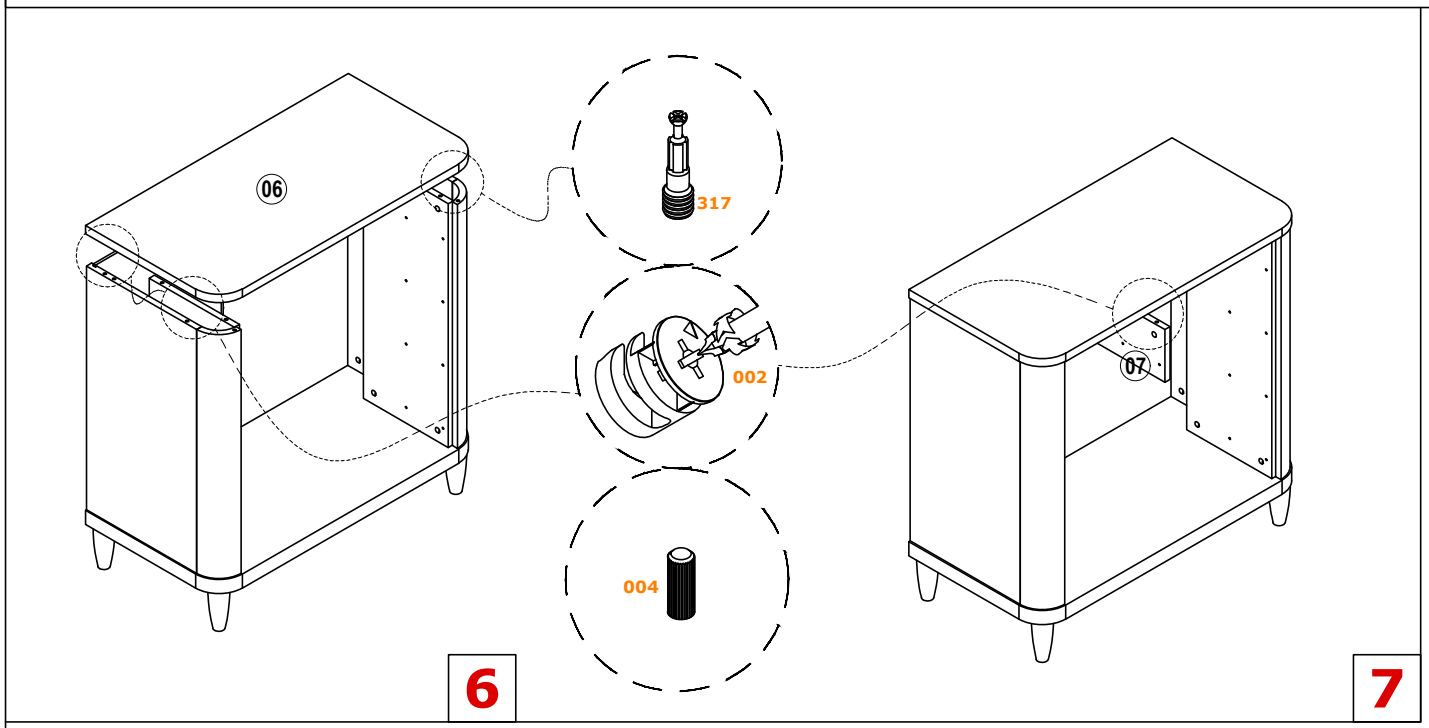


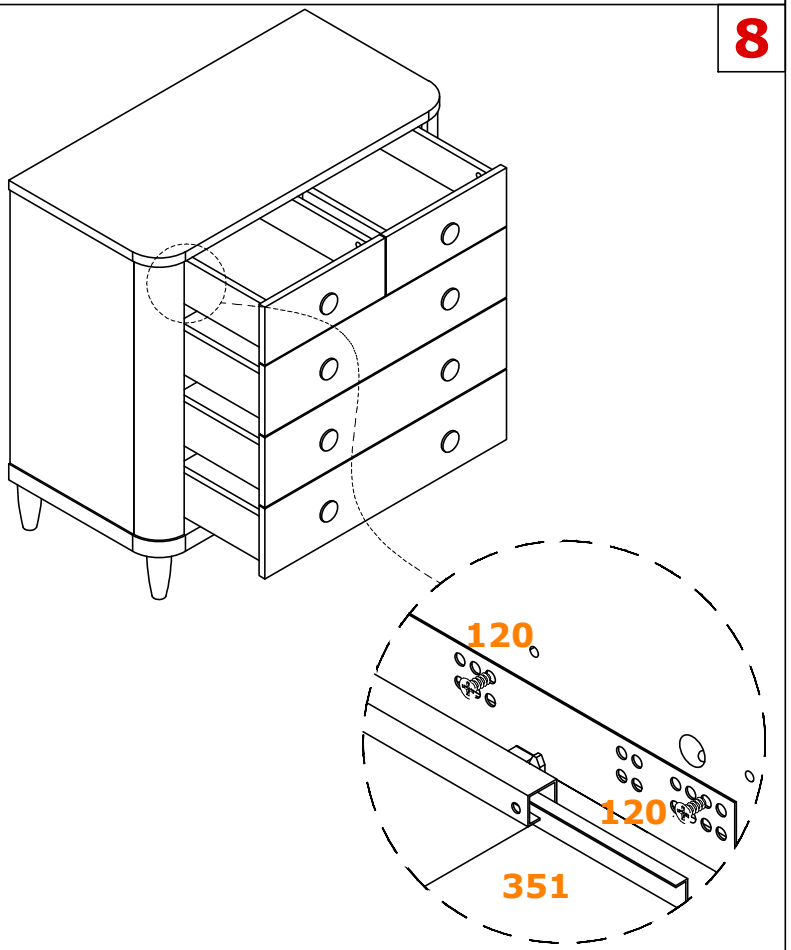


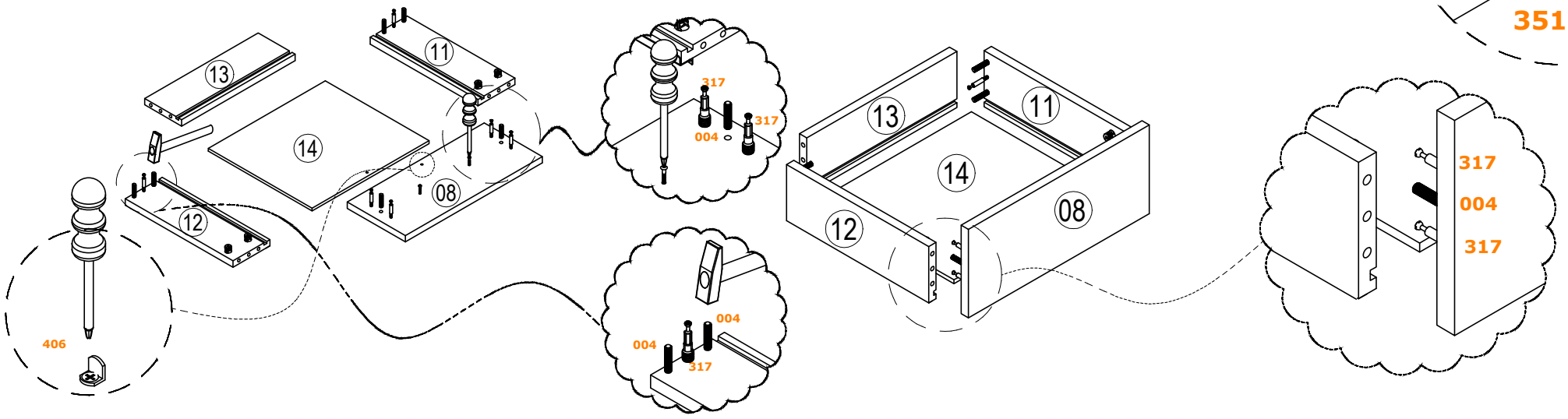


DLIQ
Quality Endorsed Company
ISO 9001 Lic. No. 6288
JAS-ANZ